TECEsquare 9240800 – 9240809, 9240815 + 9240647

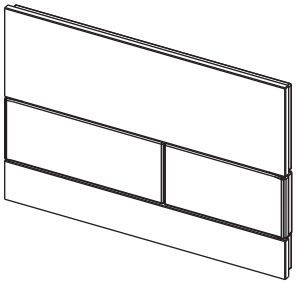

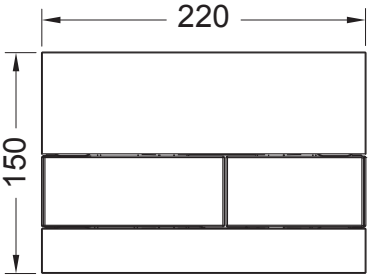

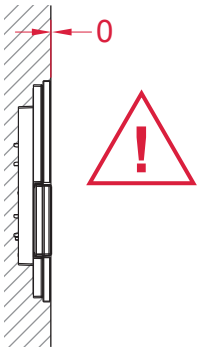

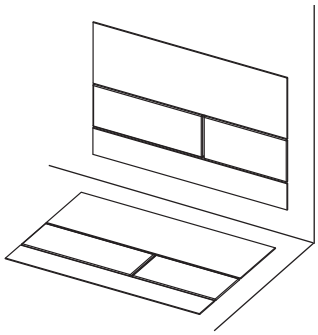

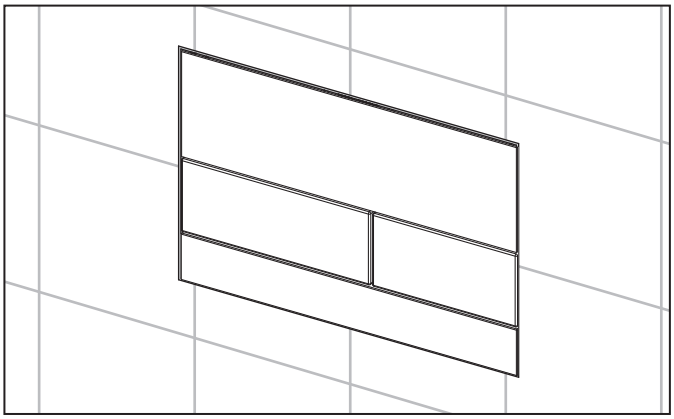

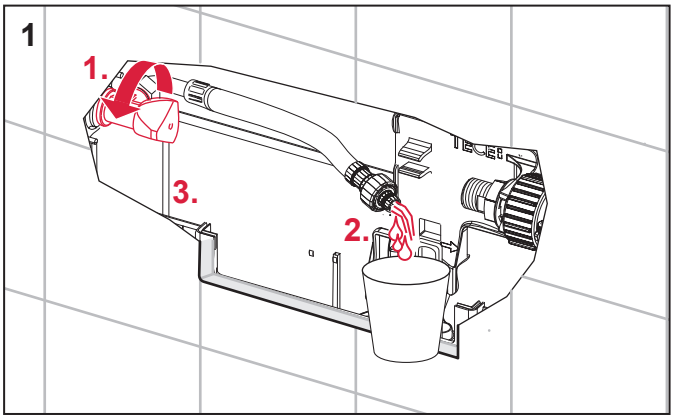

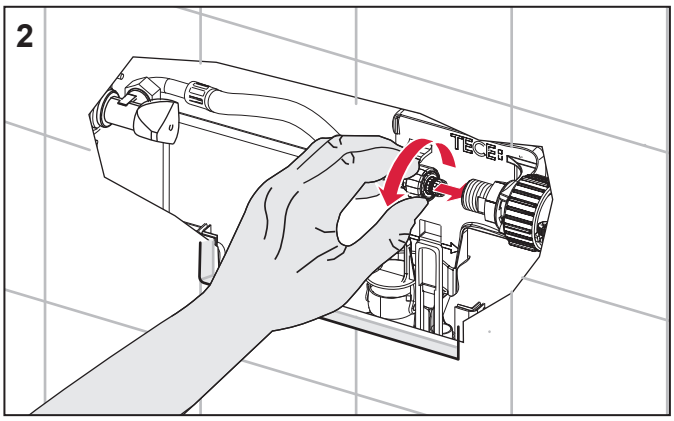

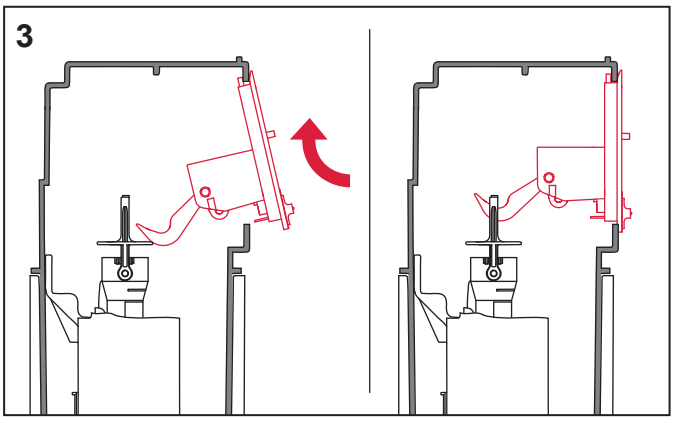

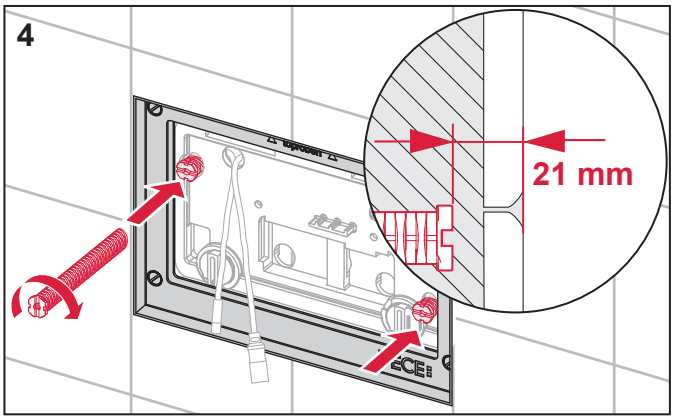

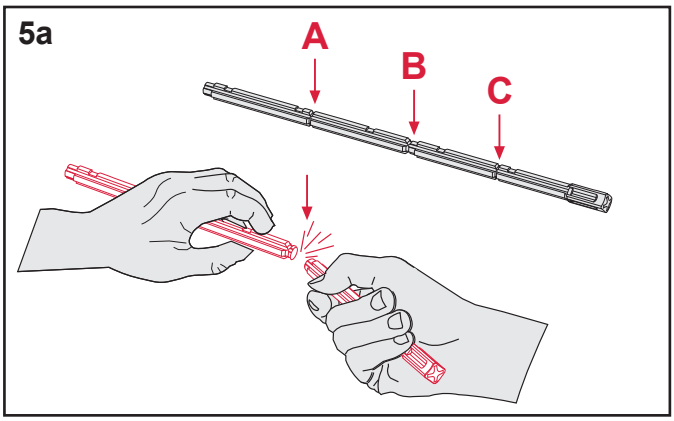

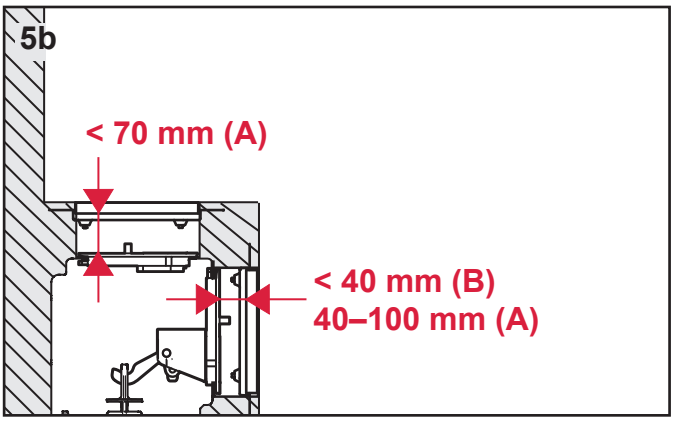

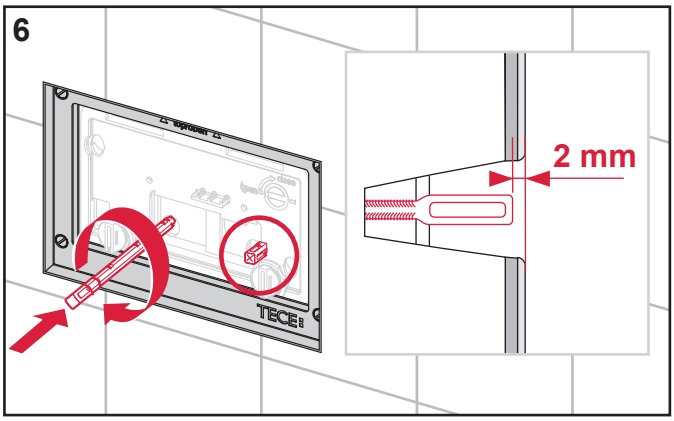

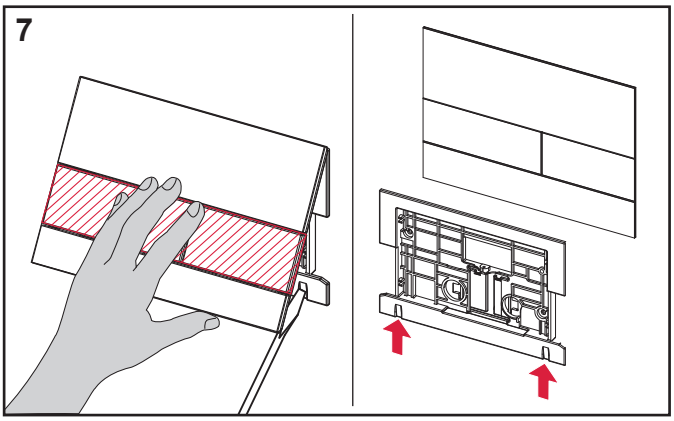

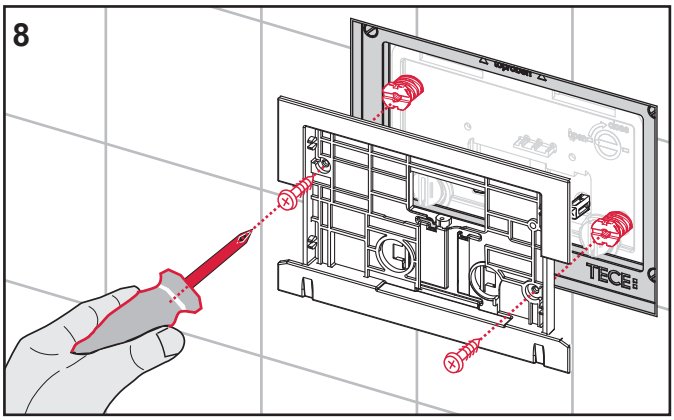

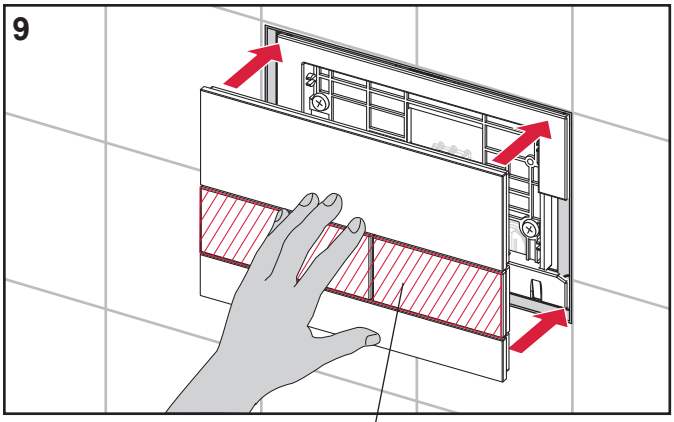

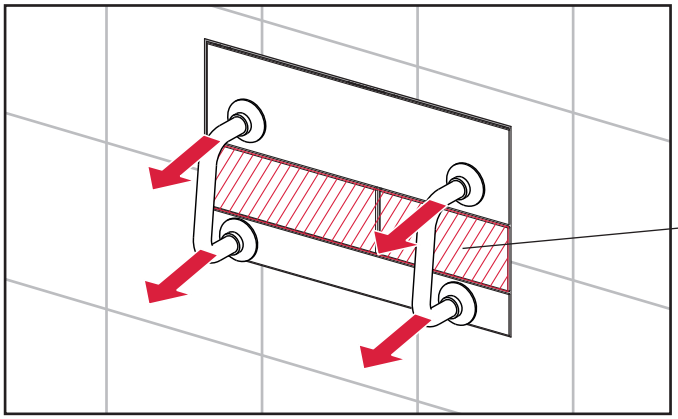

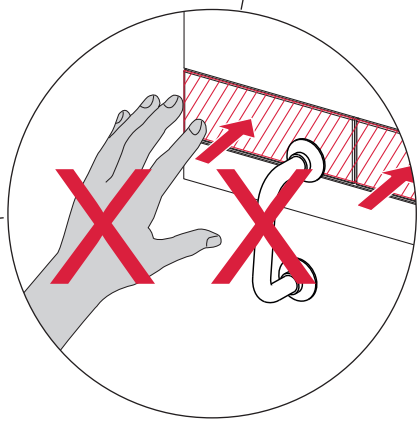

SP430 037 00 c