TECElux – 9 650 000 /...001 /...004 /...005

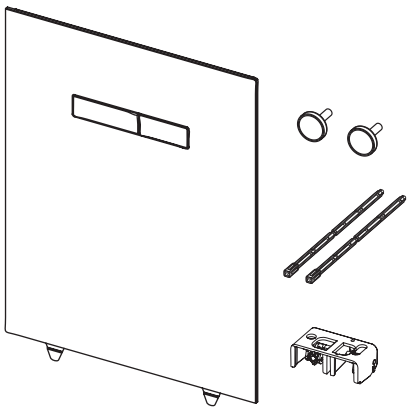

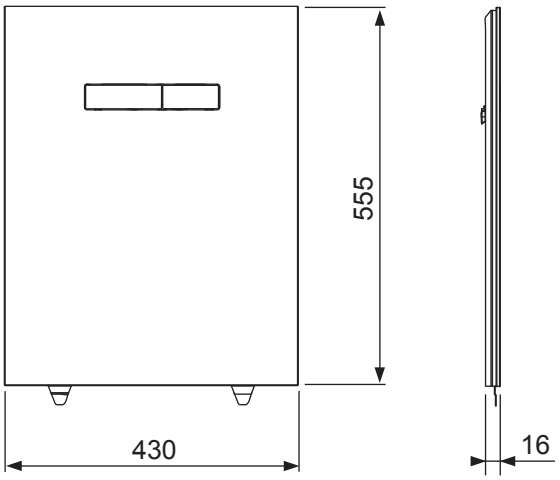

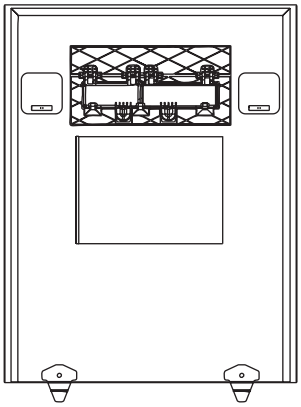

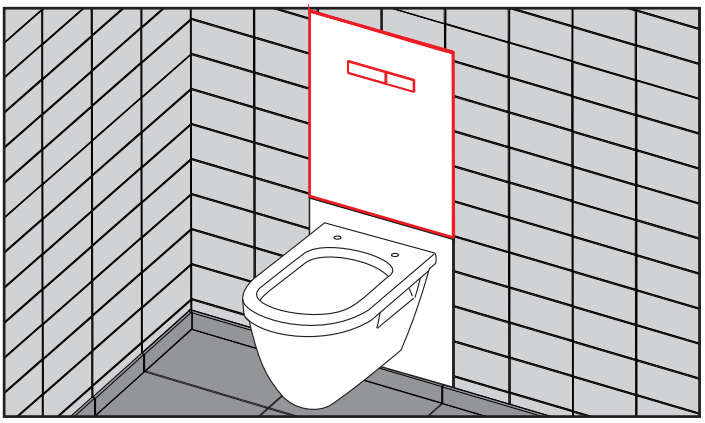

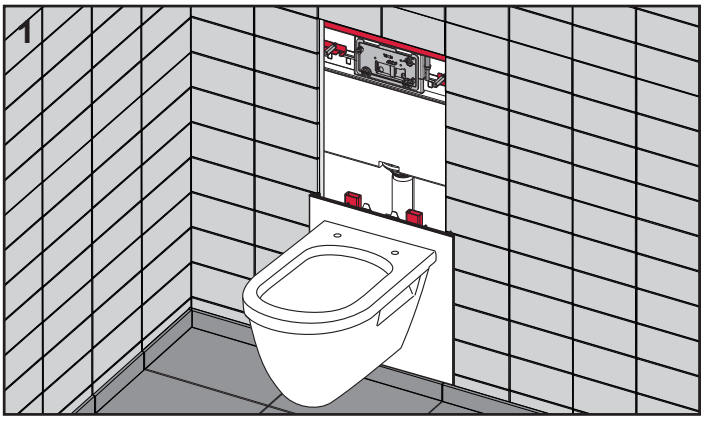

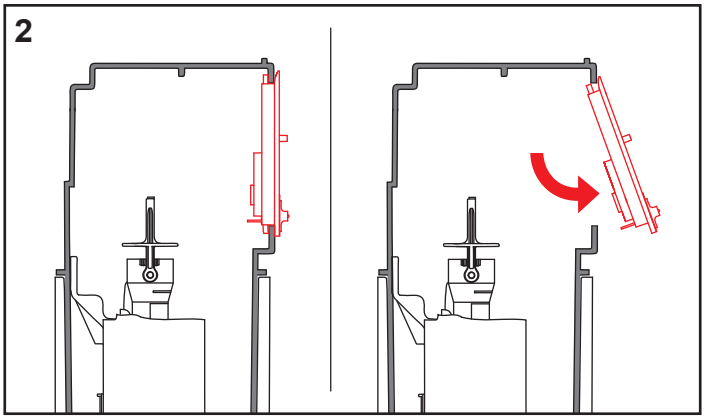

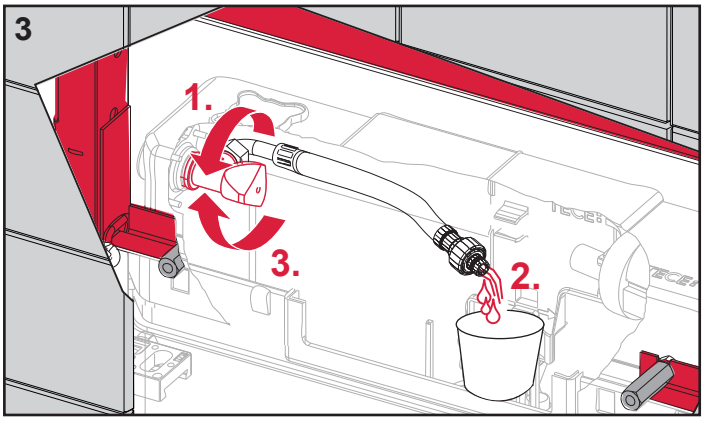
3
1.
2.
3.

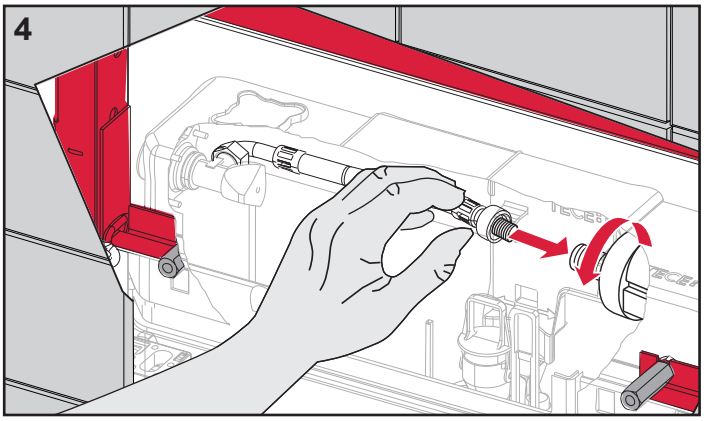
4

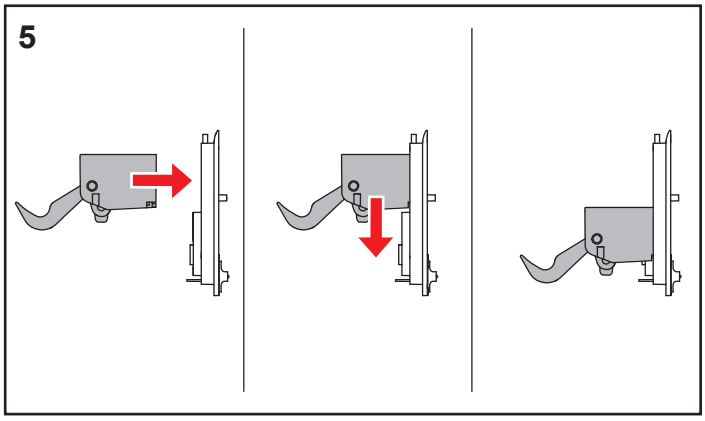
5

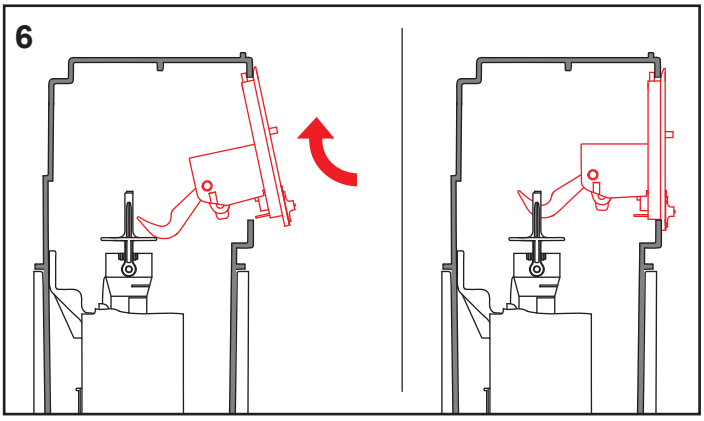
6

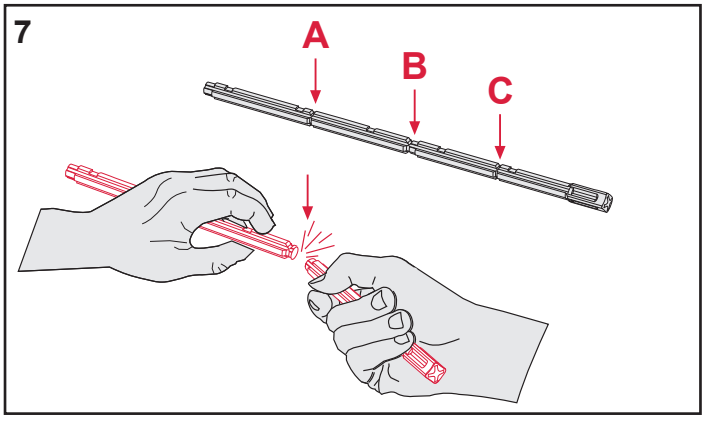
7
A
B
C

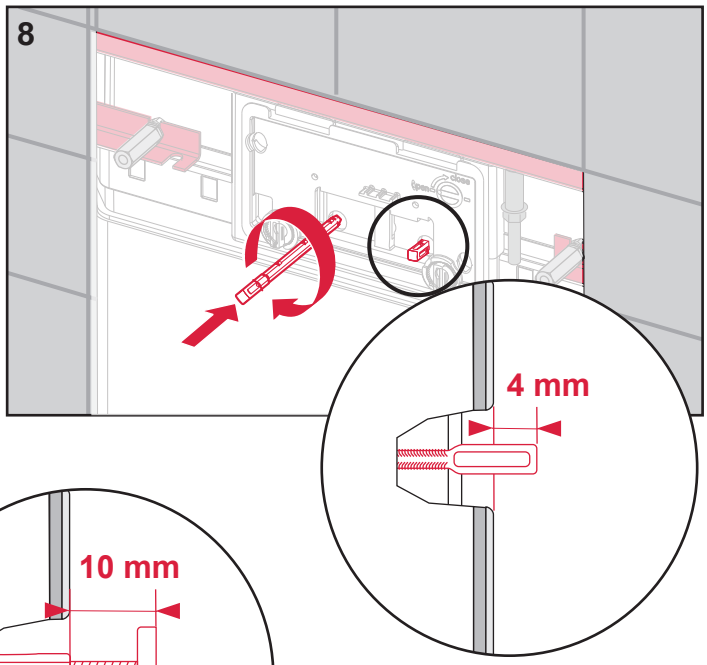
8
4 mm

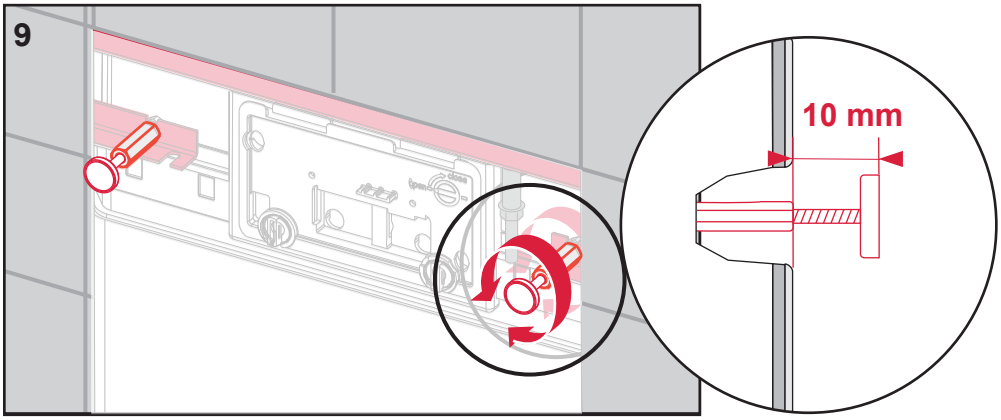
9
10 mm

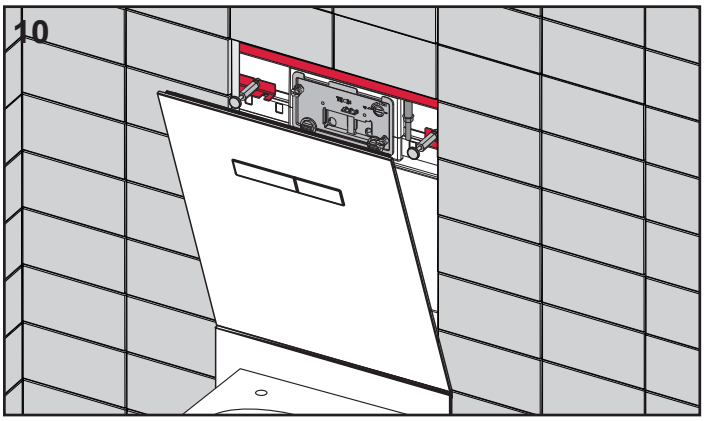

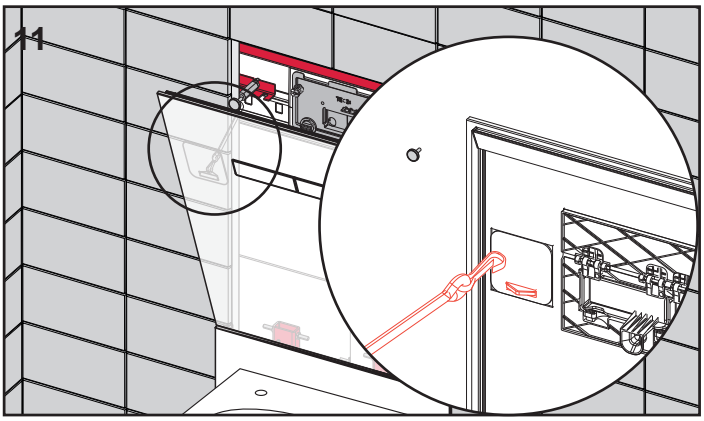

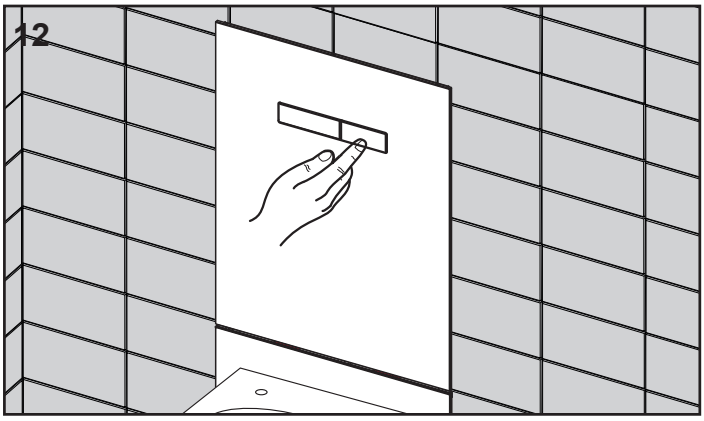

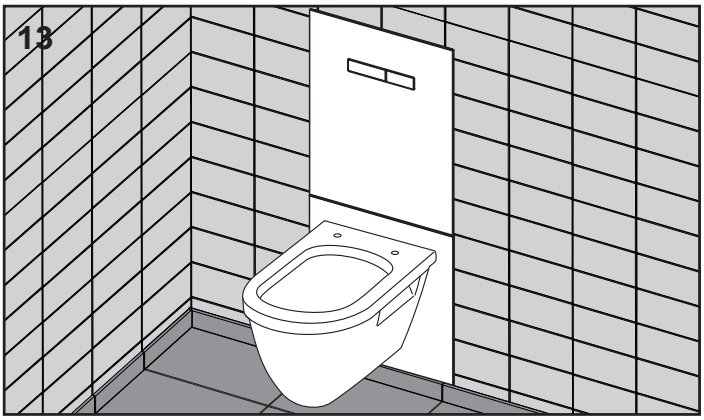

SP430 063 00 d